AUTOMATIC

EM

SERIES

TRAFFIC CONTROL PUBLIC COMMERCIAL PRIVATE

127/EM-600A / 127/EM-800A

Automatic bollards with integrated electromechanical actuator

Innovation and security without compromise

The automatic bollards of the **EM Series** use electromechanical technology designed to ensure **reliable performance and reduced maintenance**. A solution particularly suitable for residential and urban environments, where **quiet operation, frequency of use and ease of management** are important requirements.

- **Available in different models** to suit any security requirement
- Ideal for **medium-frequency use** (up to 100 cycles/day)
- Centralized control of up to **3 bollards simultaneously**
- **Smooth and silent movement**
- Simplified installation with **preconfigured wiring**.

Smart! The choice for applications where the **absence of hydraulic oil** is a requirement

Standard configuration

The standard configuration of our systems is designed to ensure efficiency, safety and ease of management. The configuration includes:

- **Anthracite grey painted steel bollard**, a device for controlling vehicle access
- **Steel foundation box with aluminium zinc coating**, an underground structure housing the bollard
- **Control unit**, manages the operation of the bollard.

PILOMAT HÖRMANN

Pilomat S.r.l.
Via Zanica 17/P, Grassobbio (BG) Italia
pilomat@pilomat.com **www.pilomat.com**

The images shown are for illustrative purposes only and may not exactly represent the actual product.

rev.01 | 14/09/2026

AUTOMATIC

EM

SERIES

TRAFFIC CONTROL | PUBLIC | COMMERCIAL | PRIVATE

127/EM-600A / 127/EM-800A

Automatic bollards with integrated electromechanical actuator

	127/EM-600A	127/EM-800A
Cylinder material	S235JR normal steel - X5CrNi 18-10 (AISI 304) stainless steel	
Cylinder diameter	127mm	
Cylinder height	600mm	800mm
Cylinder thickness	4mm	
Movement principle	Electromechanical	
Cylinder normal steel finish	Anti-corrosion treatment - grey anthracite standard painting	
Cylinder stainless steel finish	Grey anthracite standard painting or brushing	
Reflecting adhesive strip	Standard - height 22mm	
Rising time	5s	6,5s
Lowering time	4,5s	5,5s
Emergency lowering	Standard (emergency batteries included in the scope of delivery)	
Safety reversal	Standard	
Connection line to control unit	Standard 10m (max 30m)	
Voltage for control unit	230 VAC (+/- 10%) 50/60Hz	
Electromechanical motor	Built-in the bollard	
Protection class	IP 67	
Type of use	100 Cycles/day	
Life units	200.000 Cycles	
Impact resistance	20.000 J	
Breakout resistance	150.000 J	
Nominal operating temperature	-40°C +70°c (for low temperatures see heating resistance)	
Load class (EN124)	D400	

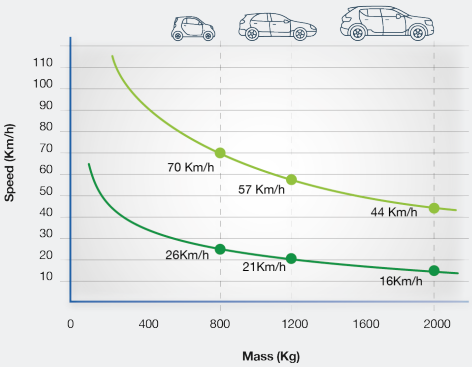

Impact resistance 20,000 J

Breakout resistance 150,000 J

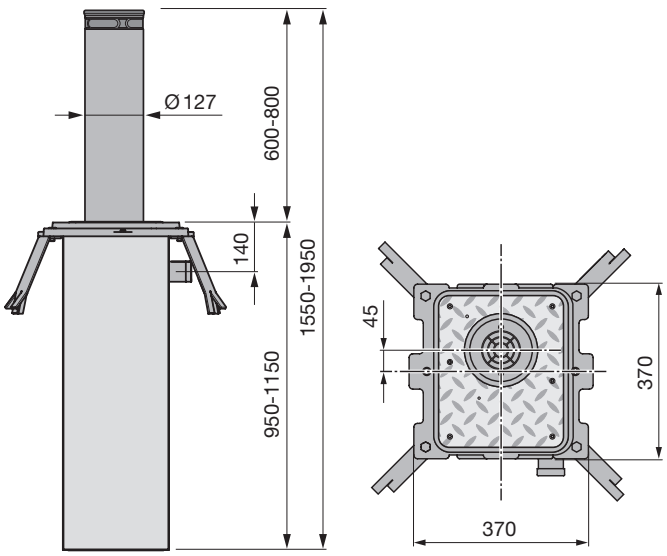

Pilomat S.r.l.
Via Zanica 17/P, Grassobbio (BG) Italia
pilomat@pilomat.com **www.pilomat.com**

The images shown are for illustrative purposes only and may not exactly represent the actual product.

rev.01 | 14/09/2026

AUTOMATIC

EM

SERIES

TRAFFIC CONTROL | PUBLIC | COMMERCIAL | PRIVATE

127/EM-600A / 127/EM-800A

Automatic bollards with integrated electromechanical actuator

Pilomat offers **safety accessories** for every installed system: including photocells, flashing lights and acoustic sensors for emergency vehicles. Each device is designed to **ensure maximum efficiency, clear signaling and secure control.**

Available finishes

RAL painting | Brushing | Anti-corrosion marine treatment

Safety and visibility

Reflecting strip | LED lighting point | Warning signal | Safety reverse function | Traffic light | Induction loops

Special design

Custom cover plate | Frame for paving stones | Fillable tank for paving stones

Functions

Automatic lowering | Heating element | UPS unit | Sensors: alarm, crash

Pilomat S.r.l.
Via Zanica 17/P, Grassobbio (BG) Italia
pilomat@pilomat.com **www.pilomat.com**

The images shown are for illustrative purposes only and may not exactly represent the actual product.

rev.01 | 14/09/2026

AUTOMATIC

EM

SERIES

TRAFFIC CONTROL | PUBLIC | COMMERCIAL | PRIVATE

127/EM-600A / 127/EM-800A

Automatic bollards with integrated electromechanical actuator

Pilomat provide a complete range of **control devices,** designed to make the use of installed systems practical and immediate. Buttons, selector and remote controls allow users to operate the devices with a single gesture, **ensuring immediate, reliable control and intuitive management.**

Control devices

Key switch

Card reader

Numeric key pad

Finger scan

Hand transmitter

License plate reader

App or Bluetooth

Timer (week - year)

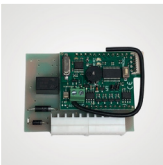

GSM activator

P-Connect

Cloud Unit W5-B

NEW

Pilomat S.r.l.
Via Zanica 17/P, Grassobbio (BG) Italia
pilomat@pilomat.com **www.pilomat.com**

The images shown are for illustrative purposes only and may not exactly represent the actual product.

rev.01 | 14/09/2026