AUTOMATIC

K/M

SERIES

PROTECTION PUBLIC COMMERCIAL

275/K4-900A
275/M30-1200A

Automatic bollards with integrated hydraulic unit

TRIPLE CERTIFICATION
PAS68, IWA14, ASTM

Direct control, from design to production

The **K/M Series** is Pilomat's hydraulic solution for protecting critical **infrastructure and sensitive areas**. The control unit, developed and manufactured in-house, allows direct control over the operating technology and offers different configurations to meet system requirements. They withstand (K4/M30 level) impacts with a truck at 50 km/h.

- **Reliable performance in intensive cycles** – ideal for high-traffic areas
- **Protection: up to 1,200,000 J** breakout resistance
- Available with **biodegradable oil**
- **Certified to PAS68, IWA 14-1, ASTM** international standards.

Smart! **Removable hydraulic pump** for **faster maintenance!**

Standard configuration

The standard configuration of our systems is designed to ensure efficiency, safety and ease of management. The configuration includes:

- **Anthracite grey painted steel bollard**, a device for controlling vehicle access
- **Foundation box**, an underground structure housing the rebars bollard
- **Control unit**, manages the operation of the bollard.

PILOMAT HÖRMANN

Pilomat S.r.l.
Via Zanica 17/P, Grassobbio (BG) Italia
pilomat@pilomat.com **www.pilomat.com**

The images shown are for illustrative purposes only and may not exactly represent the actual product.

rev.01 | 15/09/2026

AUTOMATIC

K/M

SERIES

PROTECTION PUBLIC COMMERCIAL

275/K4-900A
275/M30-1200A

Automatic bollards with integrated hydraulic unit

	275/K4-900A	275/M30-1200A
Cylinder material	S355JR normal steel - X5CrNi 18-10 (AISI 304) - X5CrNiMo 17-12-2 (AISI 316) stainless steel	
Cylinder diameter	273mm	
Cylinder height	900mm	1200mm
Cylinder thickness	10mm	16mm
Movement principle	Hydraulic	
Cylinder normal steel finish	Anti-corrosion treatment - grey anthracite standard painting	
Cylinder stainless steel finish	Grey anthracite standard painting or brushing	
Reflecting adhesive strip	Standard - height 55mm	
Rising time	7s	5,5s
EFO rising time	1s	
Lowering time	3,5s	4s
Emergency lowering	Standard	
Connection line to control unit	Standard 10m (max 80m - with heating element max 50m)	
Voltage for control unit	230/400 VAC (+/- 10%) 50/60Hz	
Hydraulic pump	Built-in the bollard	
Protection class	IP 67	
Type of use	2000 Cycles/day	
Life units	3.000.000 Cycles	
Impact resistance	250.000 J	700.000 J
Breakout resistance	750.000 J	1.200.000J
Certified to	PAS68, IWA 14-1, ASTM M30 (K4)	
In compliance with	-	ASTM M40 (K8)
Nominal operating temperature	-40°C +70°C (for low temperatures see heating resistance)	
Load class (EN124)	D400	

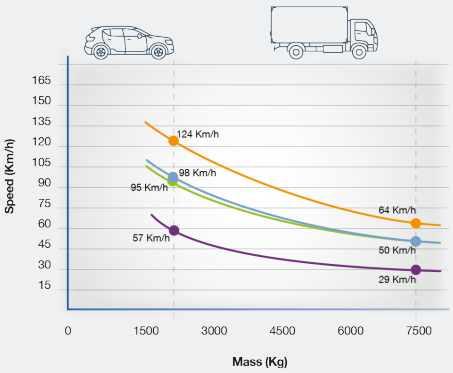

Impact resistance
- 250,000 J
- 700,000 J

Breakout resistance
- 750,000 J
- 1,200,000 J

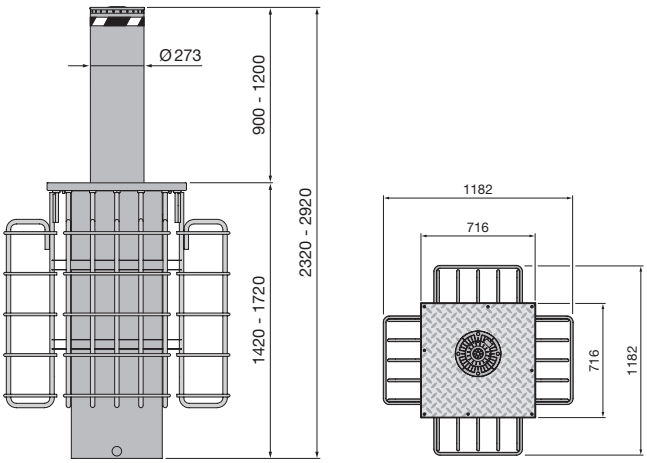

Pilomat S.r.l.
Via Zanica 17/P, Grassobbio (BG) Italia
pilomat@pilomat.com **www.pilomat.com**

The images shown are for illustrative purposes only and may not exactly represent the actual product.

rev.01 | 15/09/2026

AUTOMATIC

K/M

SERIES

PROTECTION PUBLIC COMMERCIAL

275/K4-900A
275/M30-1200A

Automatic bollards with integrated hydraulic unit

Pilomat offers **safety accessories** for every installed system: including photocells, flashing lights and acoustic sensors for emergency vehicles. Each device is designed to **ensure maximum efficiency, clear signaling and secure control.**

Available finishes

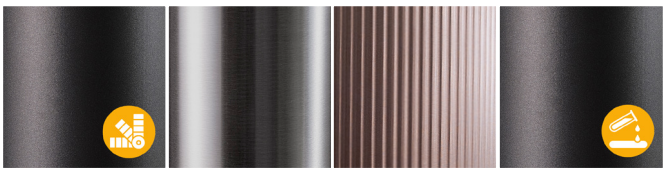

RAL painting | Brushing | Knurling | Anti-corrosion marine treatment

Safety and visibility

Reflecting strip | LED lighting strip | Warning signal | Safety reverse function | Traffic light | Induction loops

Special design

Custom cover plate | RAL painted cover | Custom inclination | Fillable tank for paving stones

Functions

Automatic lowering | EFO (Fast emergency operation) | Heating element | UPS unit | Extractable hydraulic unit | Sensors: alarm, crash

Pilomat S.r.l.
Via Zanica 17/P, Grassobbio (BG) Italia
pilomat@pilomat.com **www.pilomat.com**

The images shown are for illustrative purposes only and may not exactly represent the actual product.

rev.01 | 15/09/2026

AUTOMATIC

K/M

SERIES

PROTECTION PUBLIC COMMERCIAL

275/K4-900A
275/M30-1200A

Automatic bollards with integrated hydraulic unit

Pilomat provide a complete range of **control devices,** designed to make the use of installed systems practical and immediate. Buttons, selector and remote controls allow users to operate the devices with a single gesture, **ensuring immediate, reliable control and intuitive management.**

Control devices

Key switch

Card reader

Numeric key pad

Finger scan

Hand transmitter

License plate reader

App or Bluetooth

Timer (week - year)

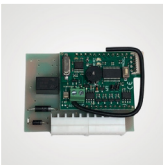
GSM activator

P-Connect

Cloud Unit W5-B

NEW

Pilomat S.r.l.
Via Zanica 17/P, Grassobbio (BG) Italia
pilomat@pilomat.com **www.pilomat.com**

The images shown are for illustrative purposes only and may not exactly represent the actual product.

rev.01 | 15/09/2026