AUTOMATIC

P

SERIES

TRAFFIC CONTROL PUBLIC COMMERCIAL PRIVATE

127/P-600A / 127/P-800A

Automatic bollards with integrated hydraulic unit

Perfect for managing urban and commercial access

The automatic bollards of the **P Series** are the ideal choice for managing urban traffic and controlling access in **historic centers**, **residential areas**, **corporate parking lots, and commercial zones.** Thanks to the **integrated hydraulic technology**, they ensure **continuous and safe operation even under heavy traffic conditions**.

- **Smart access control** for historic centers and Limited Traffic Zones (ZTL)
- **Protection** for private and commercial parking areas with high flow
- **Resistance up to 150,000 J** to meet urban requirements
- **Simultaneous management of multiple bollards**
- Various configurations for **perfect integration in urban settings.**

Smart! Available with **biodegradable oil**

Standard configuration

The standard configuration of our systems is designed to ensure efficiency, safety and ease of management. The configuration includes:

- **Anthracite grey painted steel bollard**, a device for controlling vehicle access
- **Steel foundation box with aluminium zinc coating**, an underground structure housing the bollard
- **Control unit**, manages the operation of the bollard.

PILOMAT HÖRMANN

Pilomat S.r.l.
Via Zanica 17/P, Grassobbio (BG) Italia
pilomat@pilomat.com **www.pilomat.com**

The images shown are for illustrative purposes only and may not exactly represent the actual product.

rev.01 | 10/09/2026

AUTOMATIC

P

SERIES

TRAFFIC CONTROL PUBLIC COMMERCIAL PRIVATE

127/P-600A / 127/P-800A

Automatic bollards with integrated hydraulic unit

	127/P-600A	127/P-800A
Cylinder material	S235JR normal steel - X5CrNi 18-10 (AISI 304) stainless steel	
Cylinder diameter	127mm	
Cylinder height	600mm	800mm
Cylinder thickness	8mm	6mm
Movement principle	Hydraulic	
Cylinder normal steel finish	Anti-corrosion treatment - grey anthracite standard painting	
Cylinder stainless steel finish	Grey anthracite standard painting or brushing	
Reflecting adhesive strip	Standard - height 22mm	
Rising time	2,5s	3s
Lowering time	2s	2,5s
Emergency lowering	Standard (optional: automatic lowering)	
Safety reversal	Standard	
Connection line to control unit	Standard 10m (max 30m - with heating element max 60m)	
Voltage for control unit	230/400 VAC (+/- 10%) 50/60Hz	
Hydraulic pump	Built-in the bollard	
Protection class	IP 67	
Type of use	2000 Cycles/day	
Life units	3.000.000 Cycles	
Impact resistance	30.000 J	
Breakout resistance	150.000 J	
Nominal operating temperature	-40°C +70°C (for low temperatures see heating resistance)	
Load class (EN124)	D400	

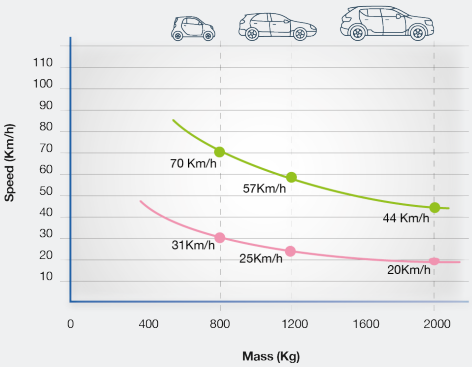

Impact resistance 30,000 J

Breakout resistance 150,000 J

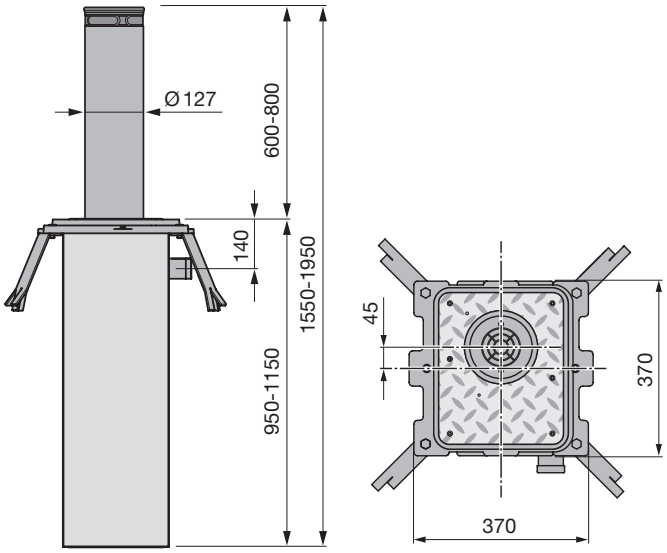

Pilomat S.r.l.
Via Zanica 17/P, Grassobbio (BG) Italia
pilomat@pilomat.com **www.pilomat.com**

The images shown are for illustrative purposes only and may not exactly represent the actual product.

rev.01 | 10/09/2026

AUTOMATIC

P

SERIES

TRAFFIC CONTROL PUBLIC COMMERCIAL PRIVATE

127/P-600A / 127/P-800A

Automatic bollards with integrated hydraulic unit

Pilomat offers **safety accessories** for every installed system: including photocells, flashing lights and acoustic sensors for emergency vehicles. Each device is designed to **ensure maximum efficiency, clear signaling and secure control.**

Available finishes

RAL painting | Brushing | Anti-corrosion marine treatment

Safety and visibility

Reflecting strip | LED lighting point | Warning signal | Safety reverse function | Traffic light | Induction loops

Special design

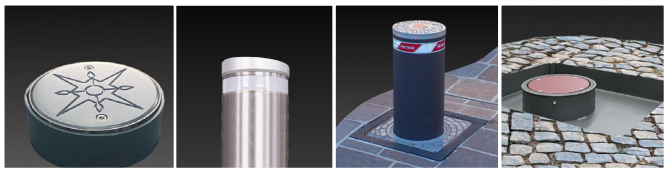

Custom cover plate | Custom inclination | Frame for paving stones | Fillable tank for paving stones

Functions

Automatic lowering | Heating element | UPS unit | Sensors: alarm, crash | Biodegradable oil

Pilomat S.r.l.
Via Zanica 17/P, Grassobbio (BG) Italia
pilomat@pilomat.com **www.pilomat.com**

The images shown are for illustrative purposes only and may not exactly represent the actual product.

rev.01 | 10/09/2026

AUTOMATIC

P

SERIES

TRAFFIC CONTROL PUBLIC COMMERCIAL PRIVATE

127/P-600A / 127/P-800A

Automatic bollards with integrated hydraulic unit

Pilomat provide a complete range of **control devices,** designed to make the use of installed systems practical and immediate. Buttons, selector and remote controls allow users to operate the devices with a single gesture, **ensuring immediate, reliable control and intuitive management.**

Control devices

Key switch

Card reader

Numeric key pad

Finger scan

Hand transmitter

License plate reader

App or Bluetooth

Timer (week - year)

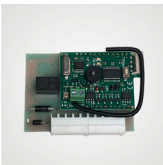

GSM activator

P-Connect

NEW

Cloud Unit W5-B

Pilomat S.r.l.
Via Zanica 17/P, Grassobbio (BG) Italia
pilomat@pilomat.com **www.pilomat.com**

The images shown are for illustrative purposes only and may not exactly represent the actual product.

rev.01 | 10/09/2026